

A X1



B X2

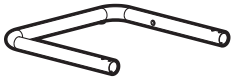

C X1



D X1

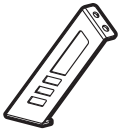

E X1



F X1



G X4



H X1

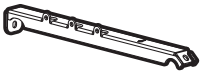

I X1

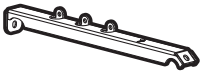

J X1

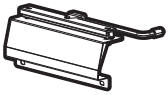

K X1

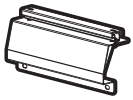

L X1

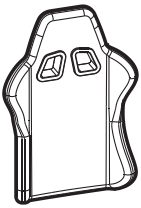

M X1



N X1

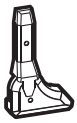

O X1



P X1



Q X8



R X8



S X1

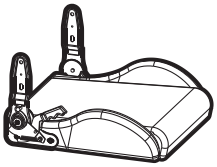

T X1



U X1



V X6

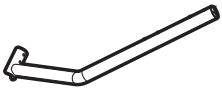

W X2

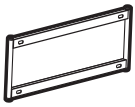

X X1



Y X2



Z X2



A1 X2

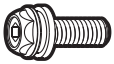

B1 X4



C1 X4



D1 X10



E1 X1



F1 X1



G1 X6

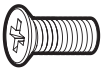

PA X2



PB X26

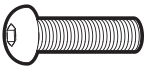

PC X4

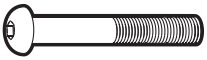

PD X6

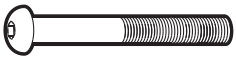

PE X4



PF X2



PG X2



PH X2



PI X4



MA X4



MB X4

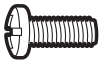

MC X4



MD X4



ME X4



MF X4



MG X8

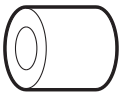

MH X4

1

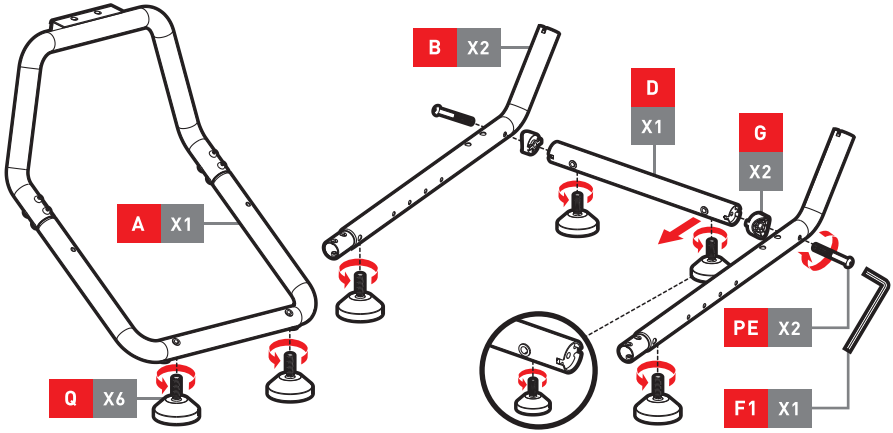

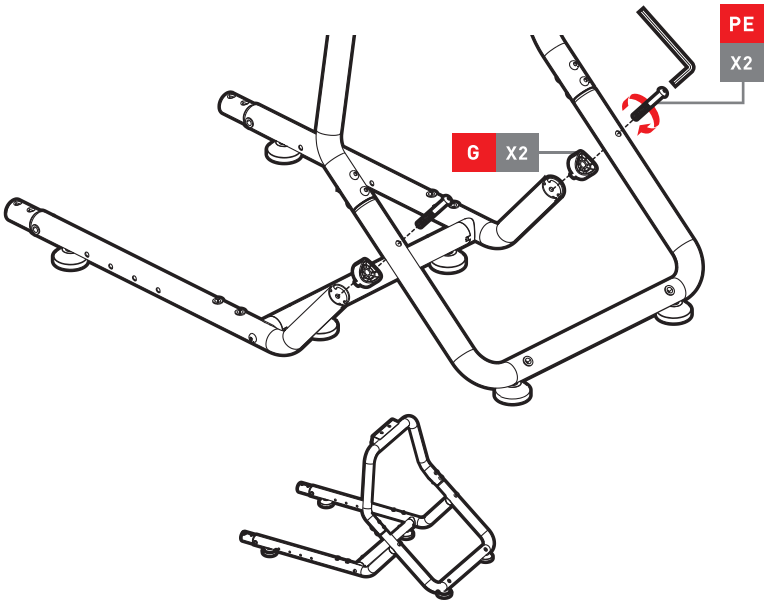

2

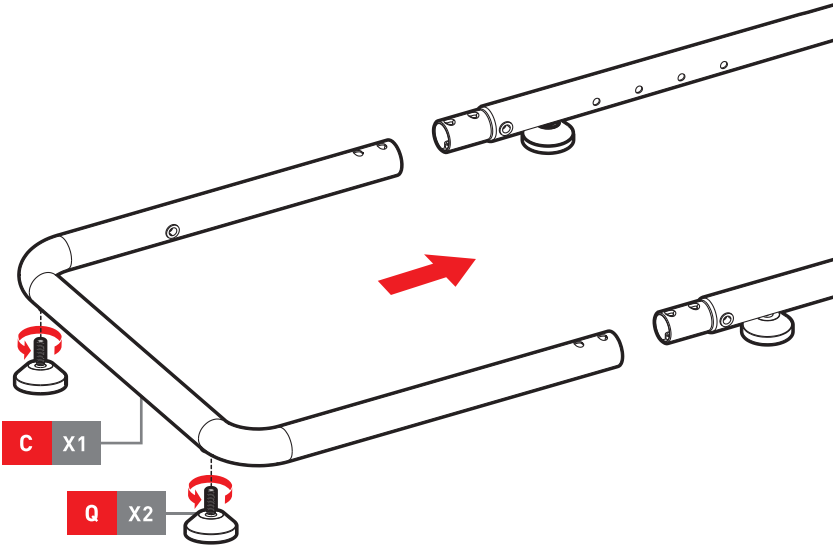

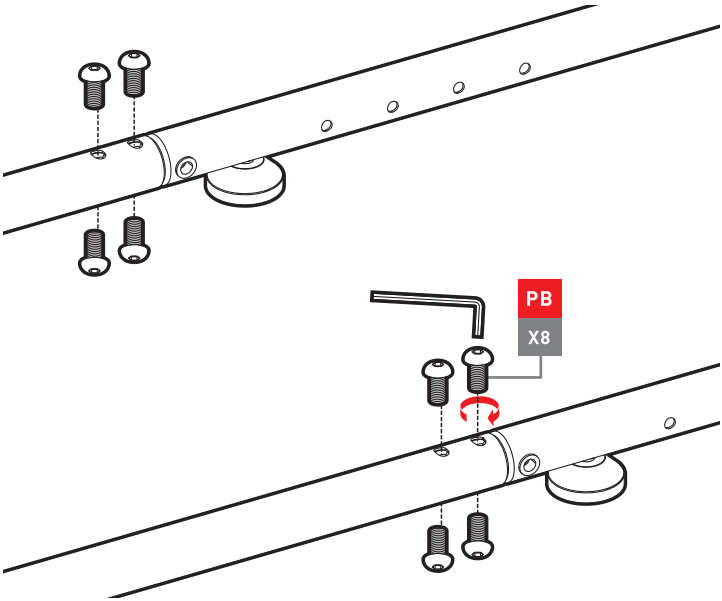

3

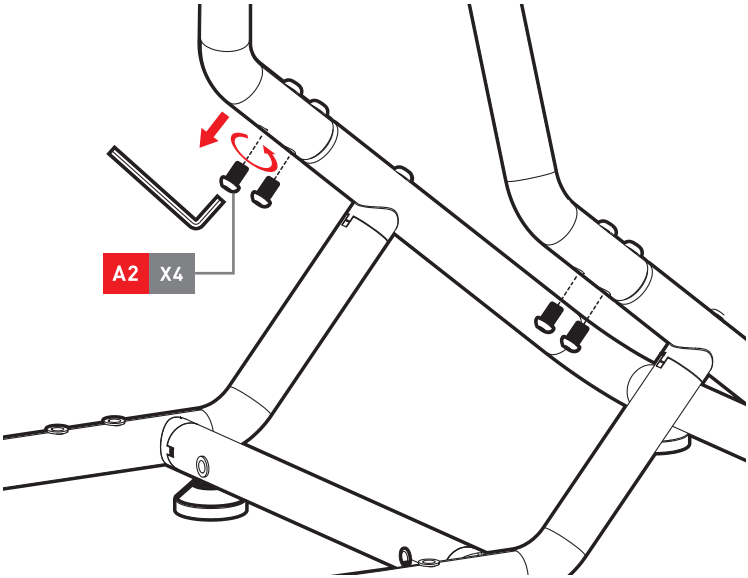

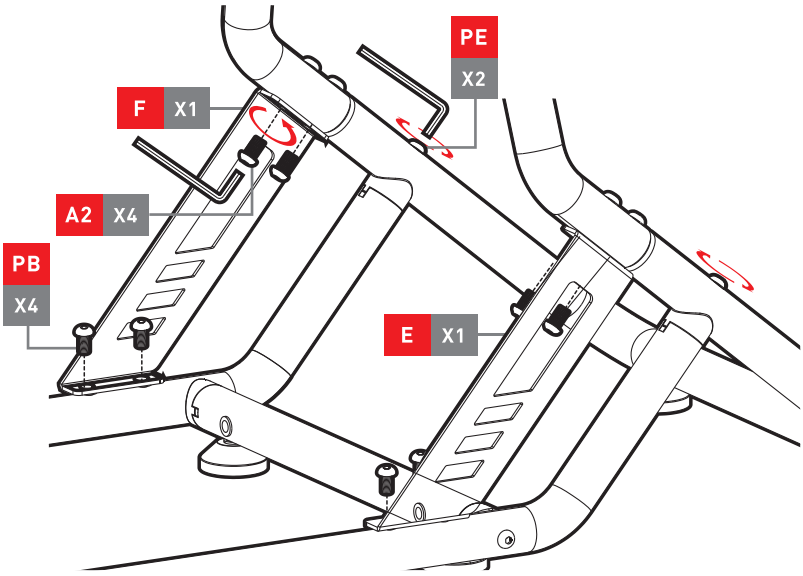

4

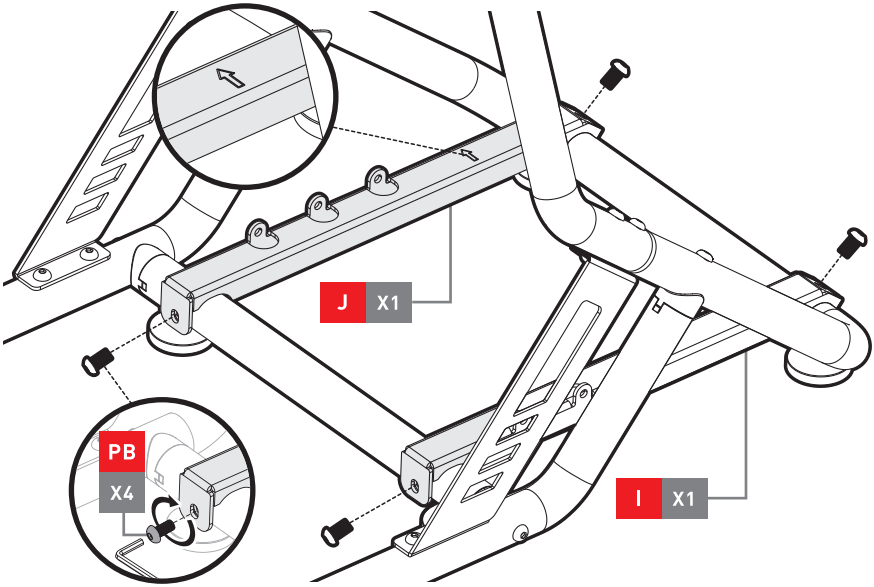

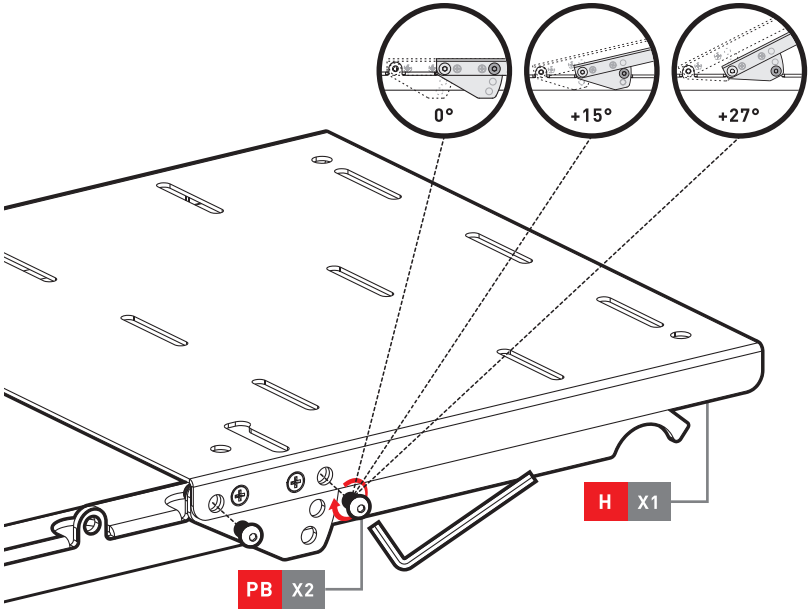

5

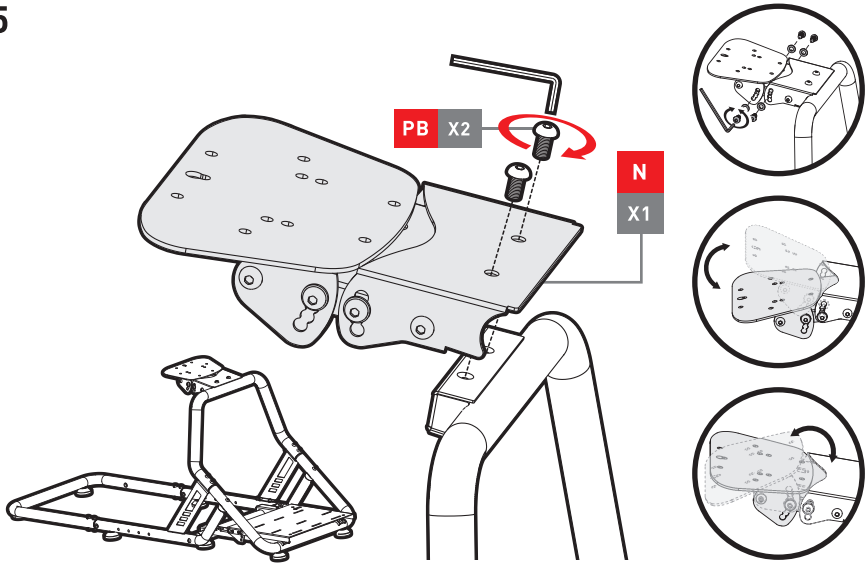

6

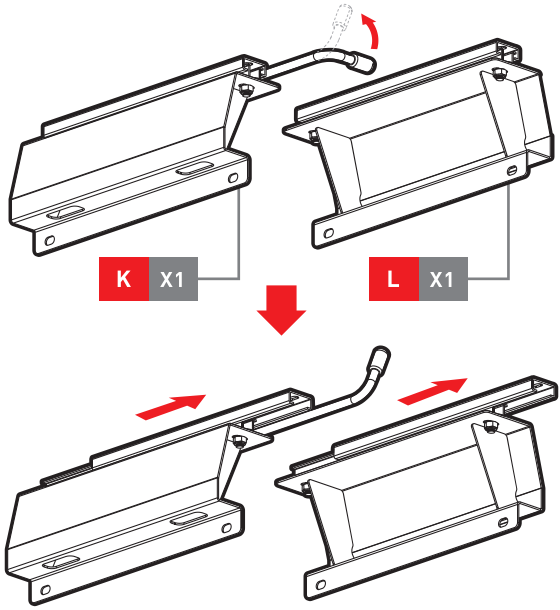

7

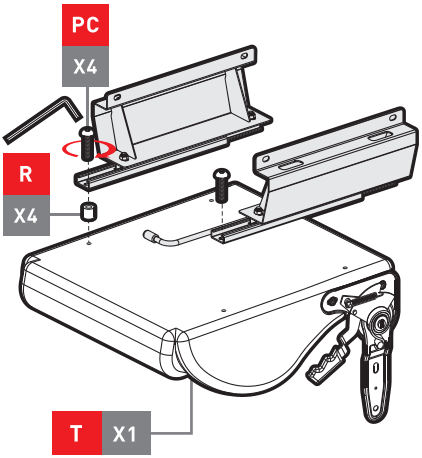

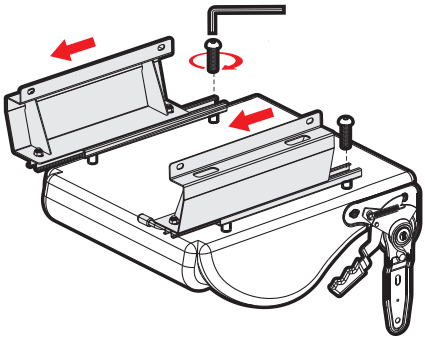

8

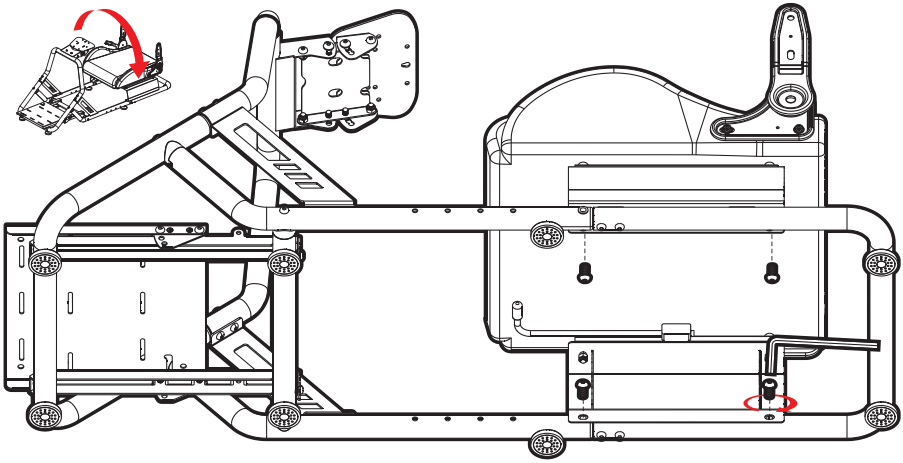

9

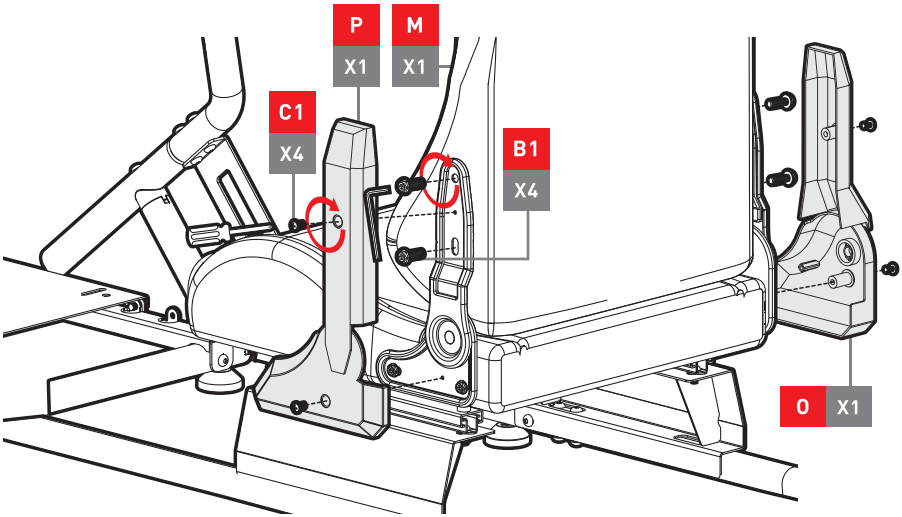

10

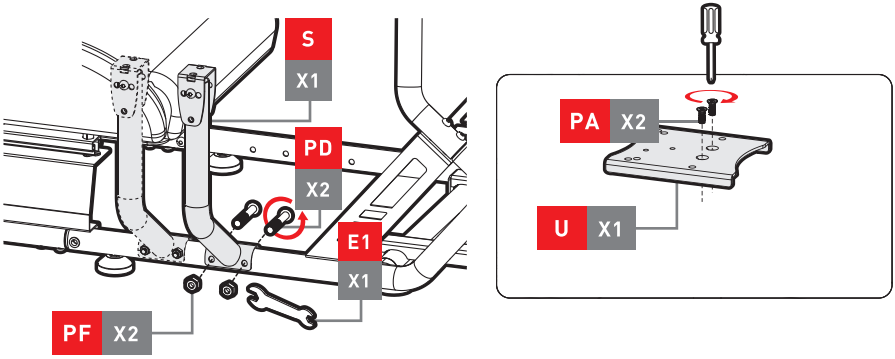

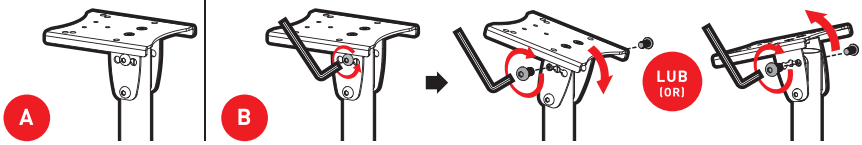

11

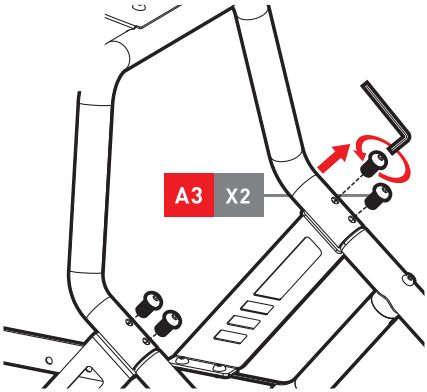

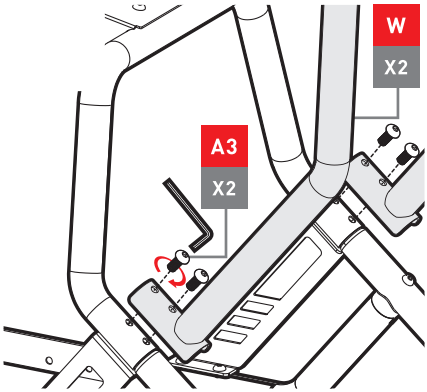

12

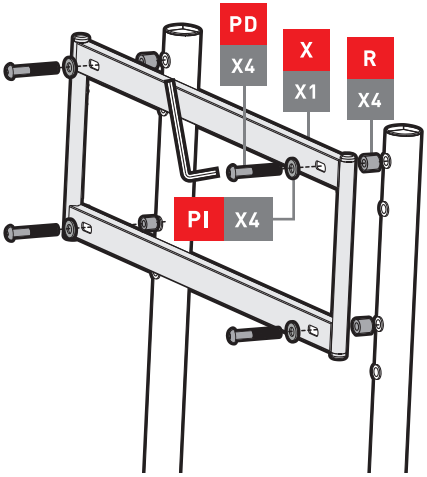

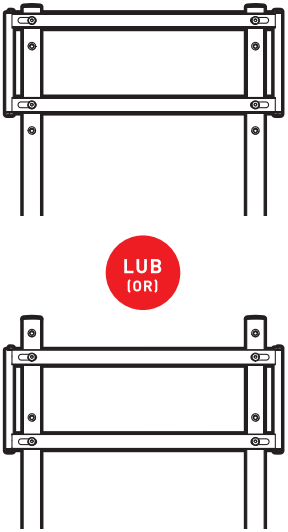

13

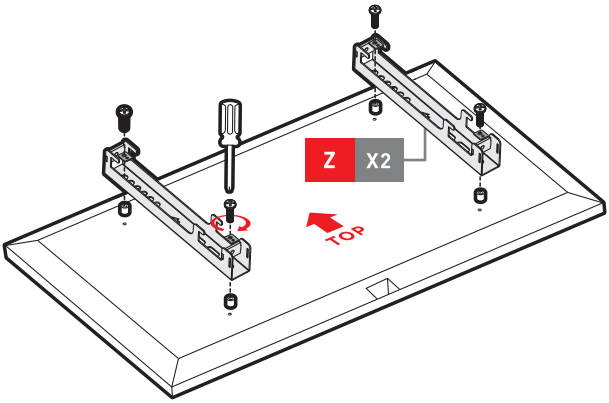

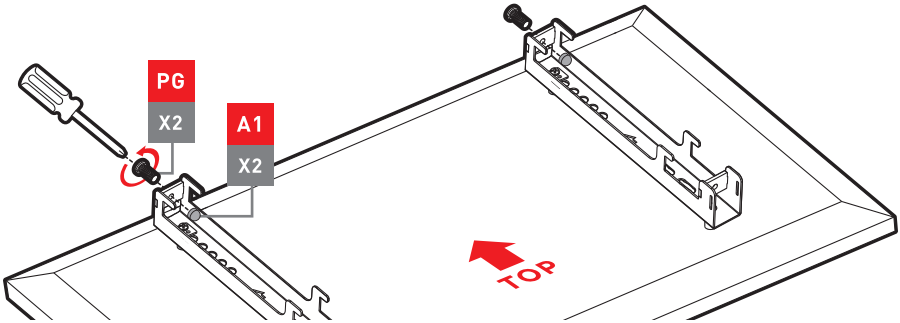

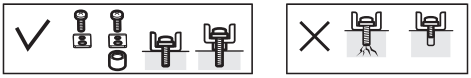

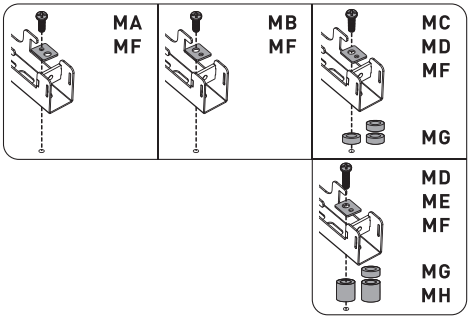

14

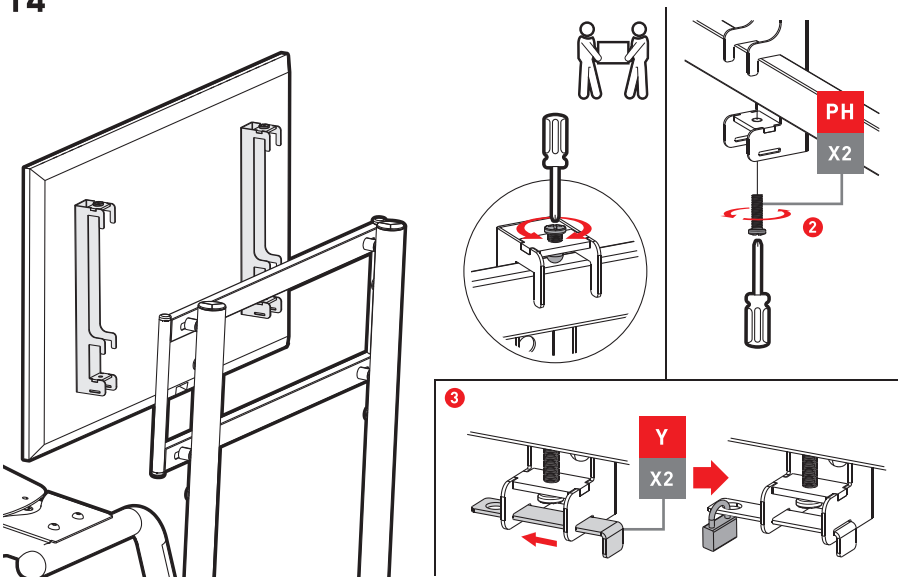

15

