

A X5

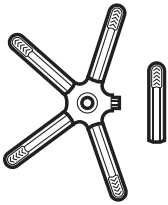

B X1

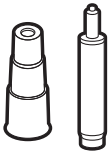

C X1

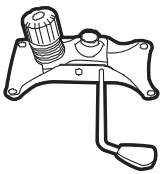

D X1

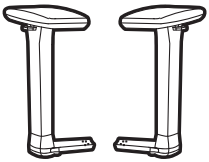

E X2

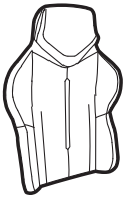

F X1

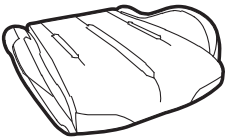

G X1

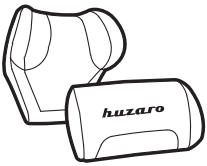

H X2

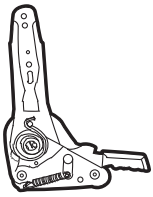

I X1



J X1

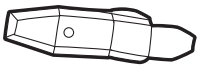

K X1



L X1

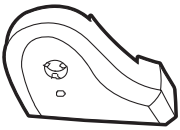

M X1

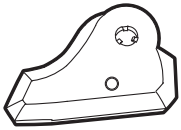

N X1



O X19



P X4



R X1



S X1

1

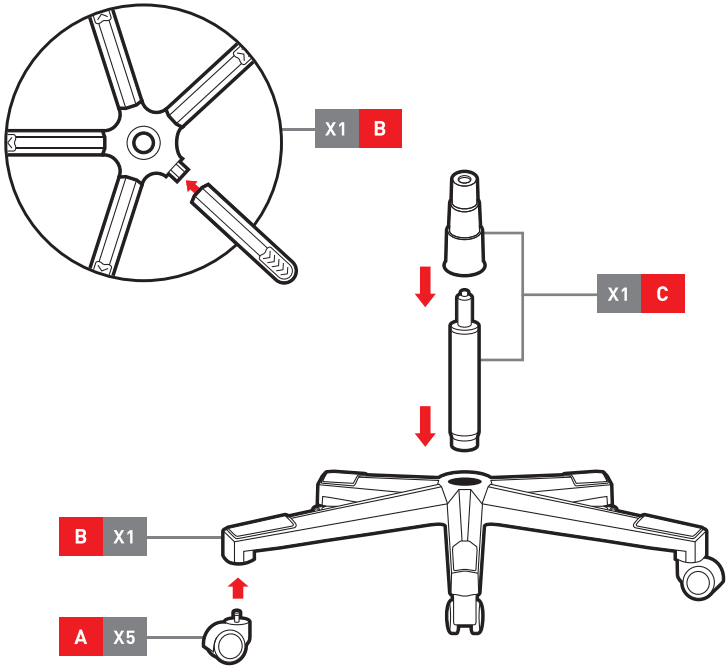

2

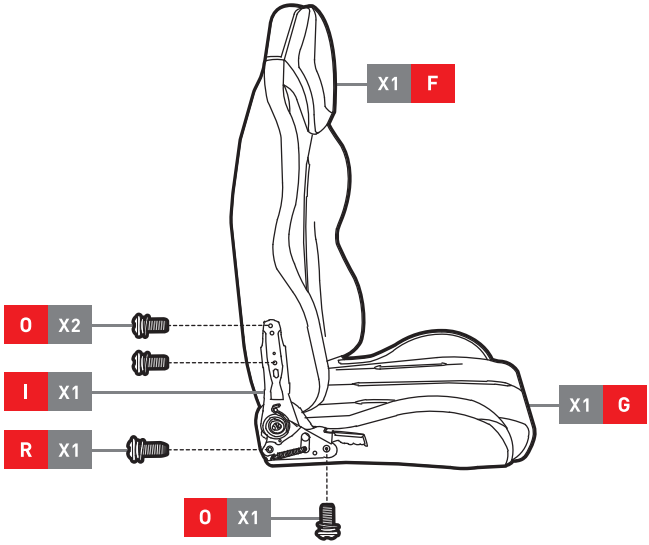

3

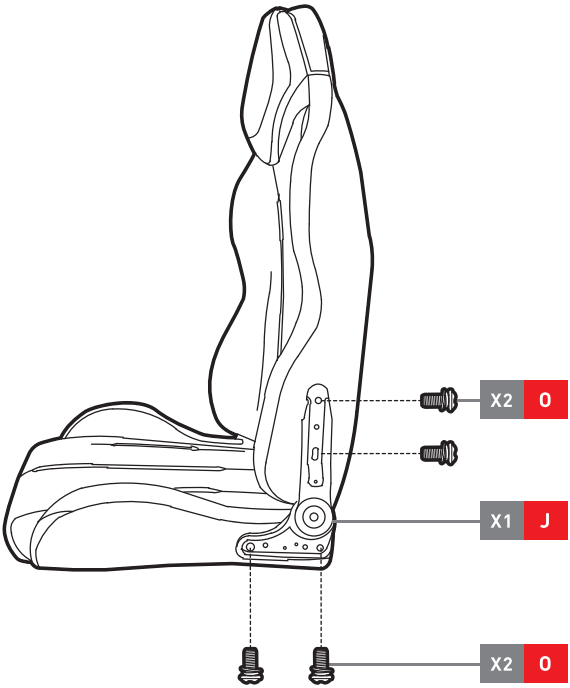

4

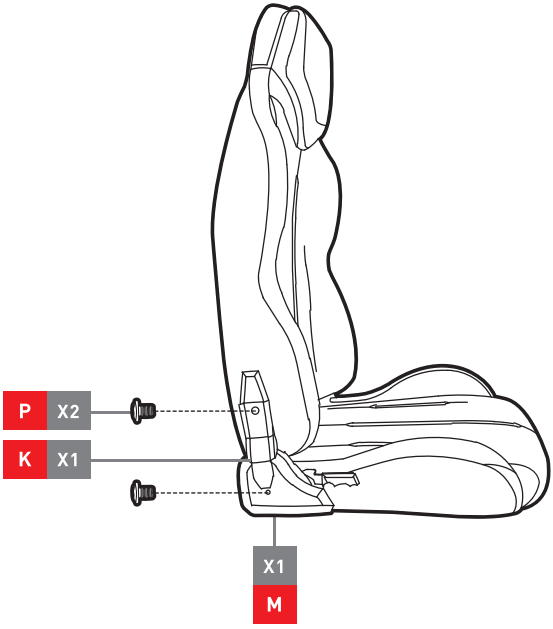

5

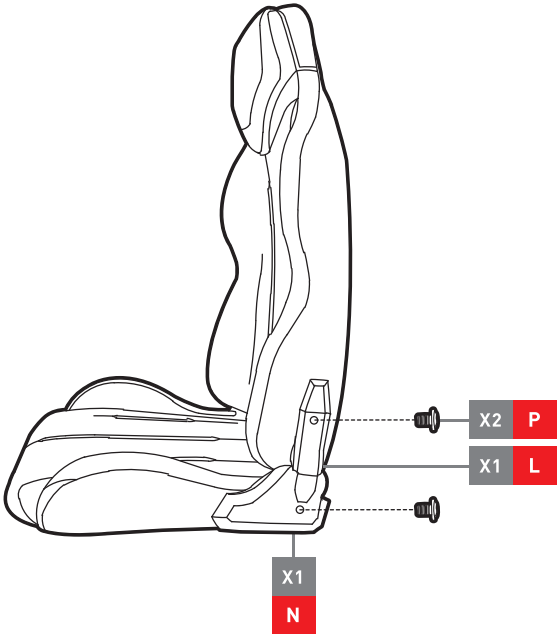

6

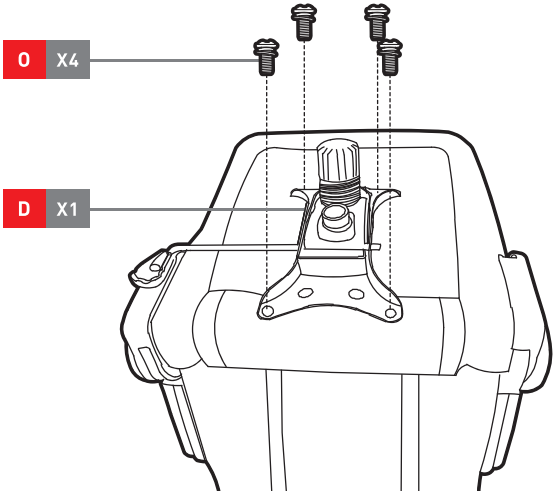

7

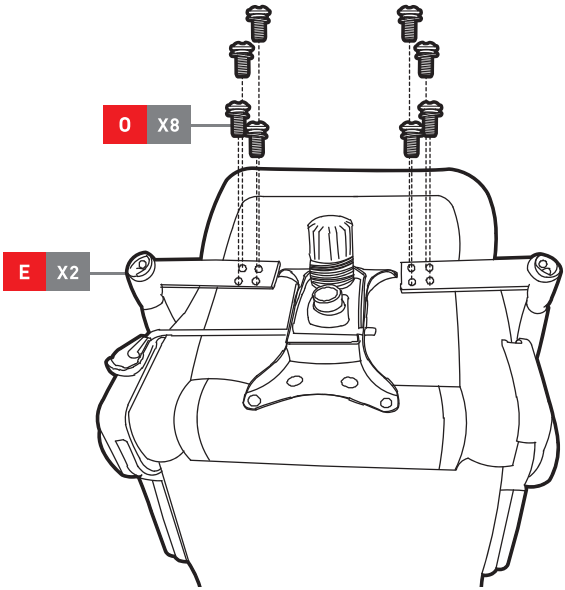

8

