

A X1



B X1



C X1



D X1

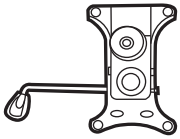

E X1



F X1



G X5



H X1



I X1



J X6



K X2



L X1



M X2

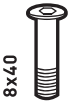

N X2



O X4



P X6



R X1

1

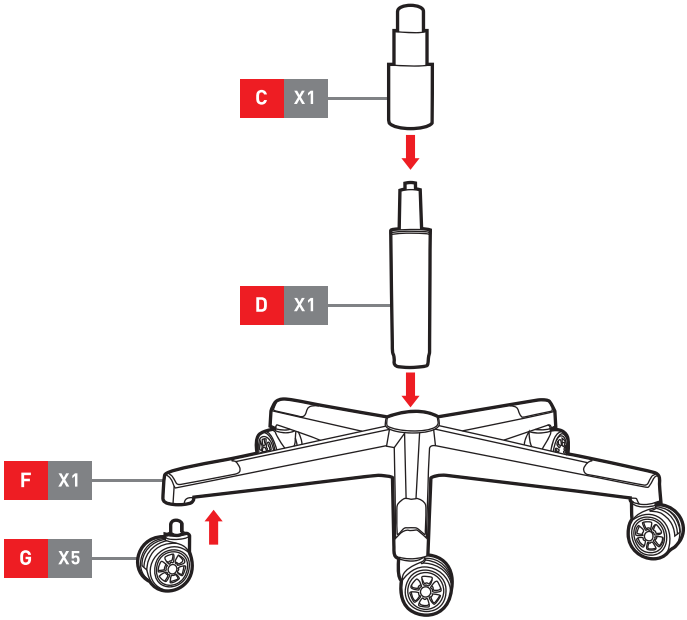

2

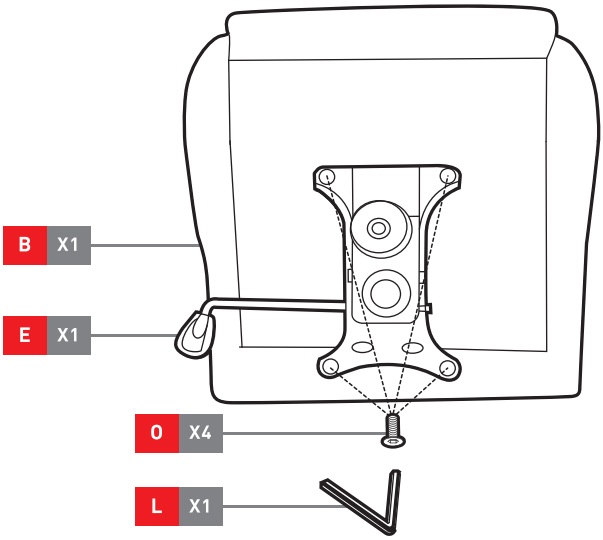

3

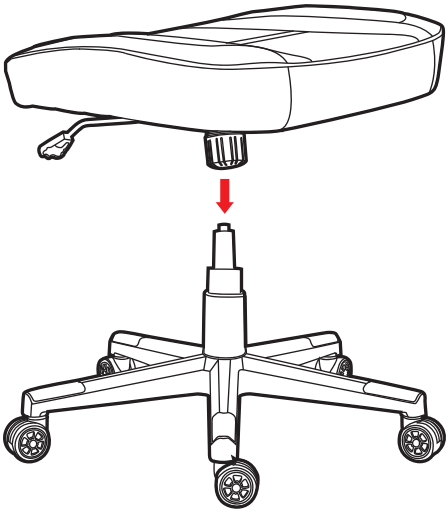

4

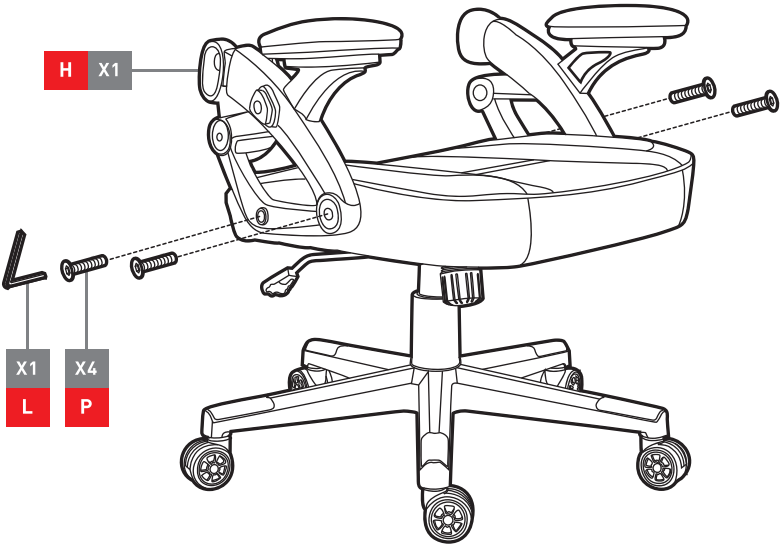

5

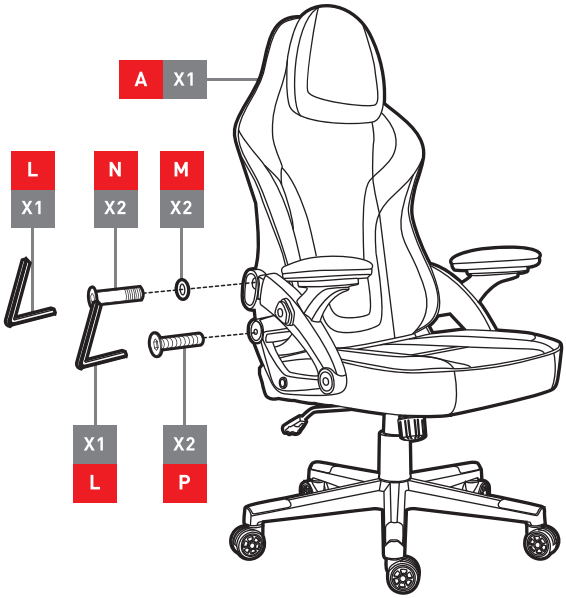

6



7

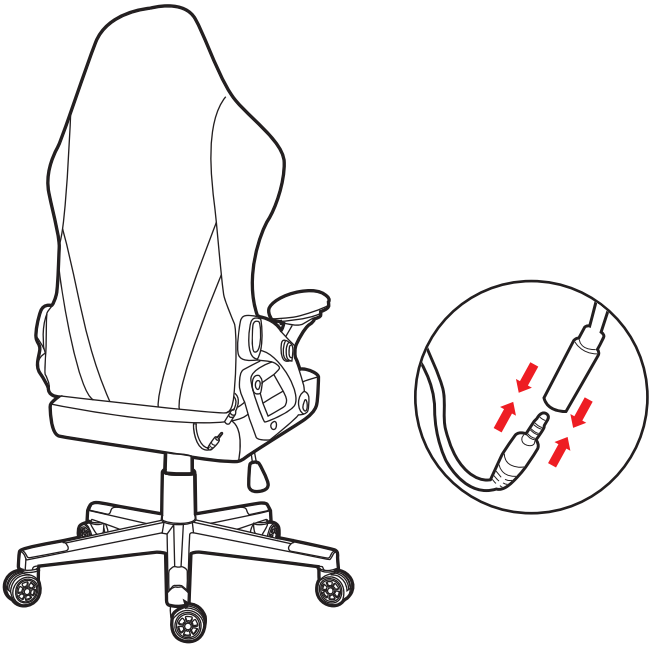

8

