

A X1



B X1



C X2

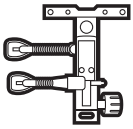

D X1

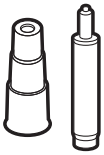

E X1

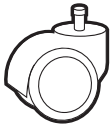

F X5

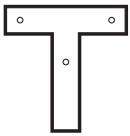

G X1

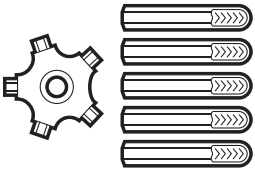

H X1

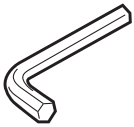

I X1

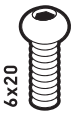

J X4

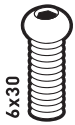

K X3

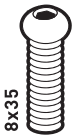

L X4



M X4

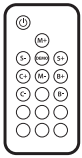

N X1

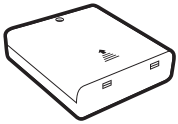

O X1

1

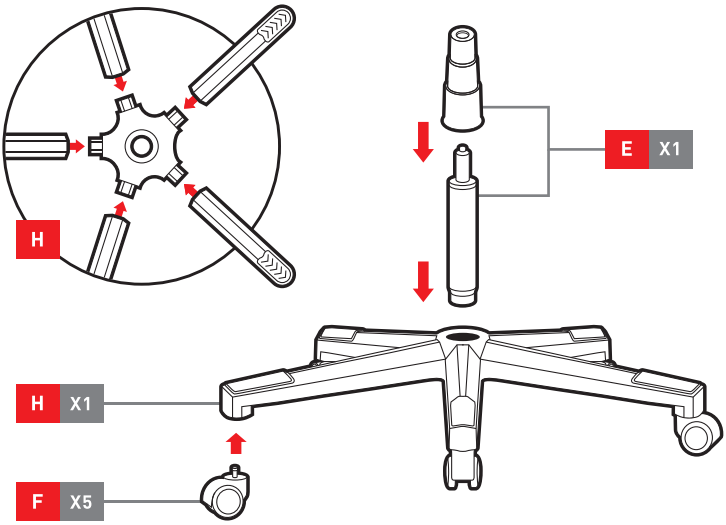

2

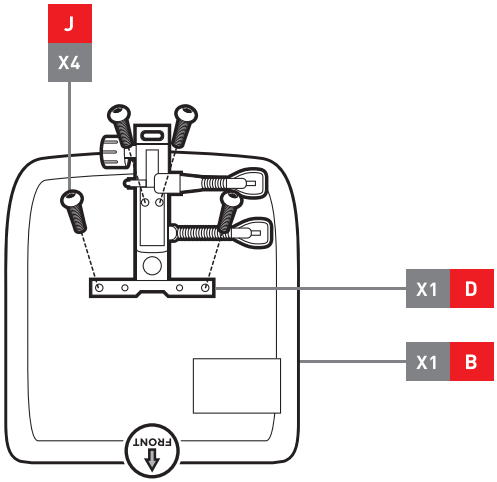

3

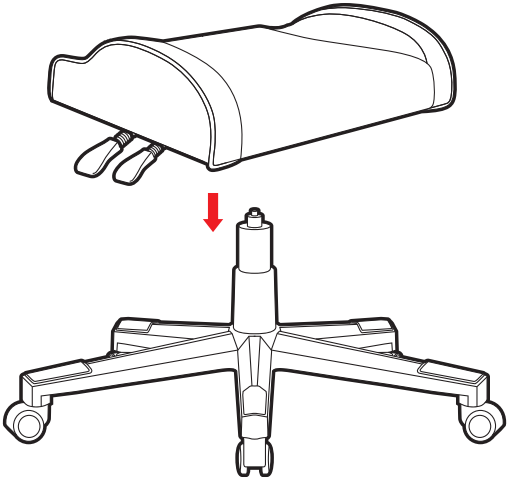

4

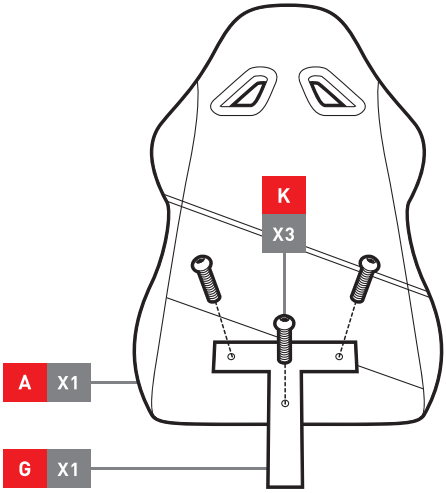

5

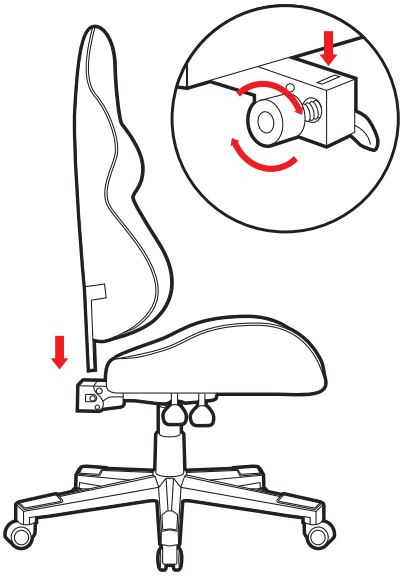

6

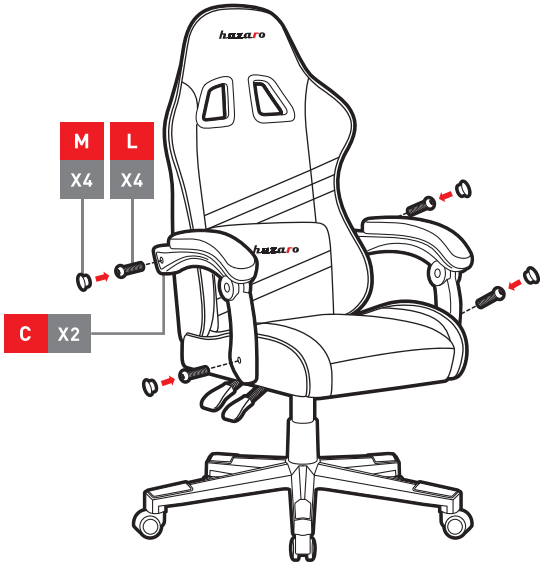

7

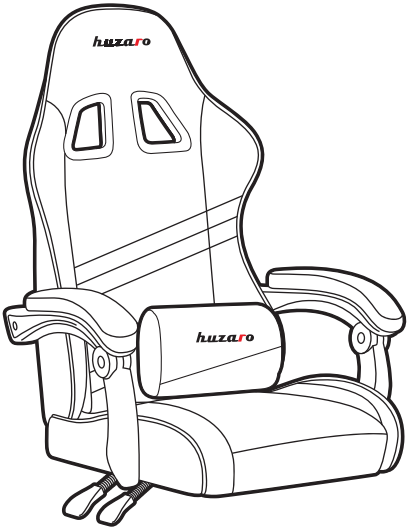

8

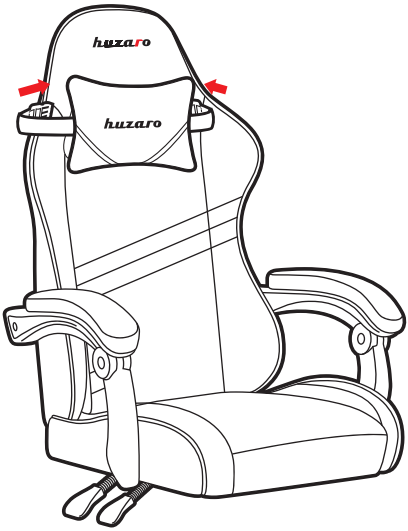

9

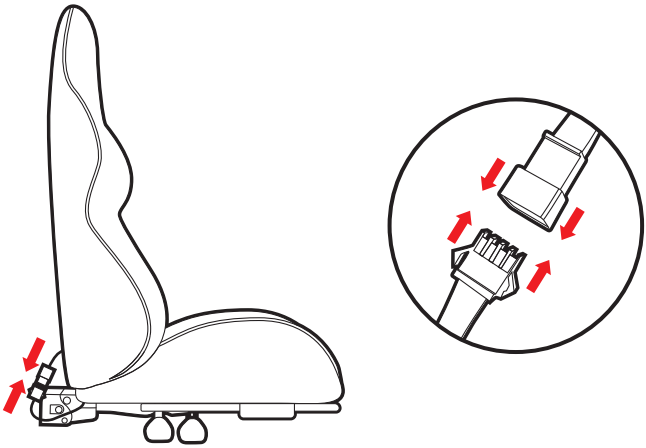

10

