

A X1



B X1

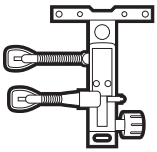

C X1

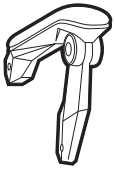

D X2



E X1

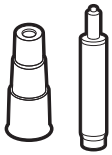

F X1

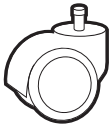

G X5

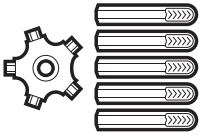

H X1



I X1

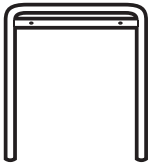

J X1

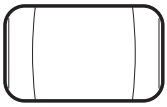

K X1

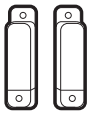

L X2

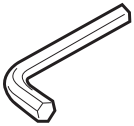

M X1

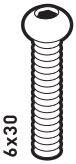

N X3

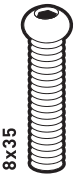

O X2



P X6

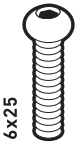

R X4



S X2



T X4



U X1

1

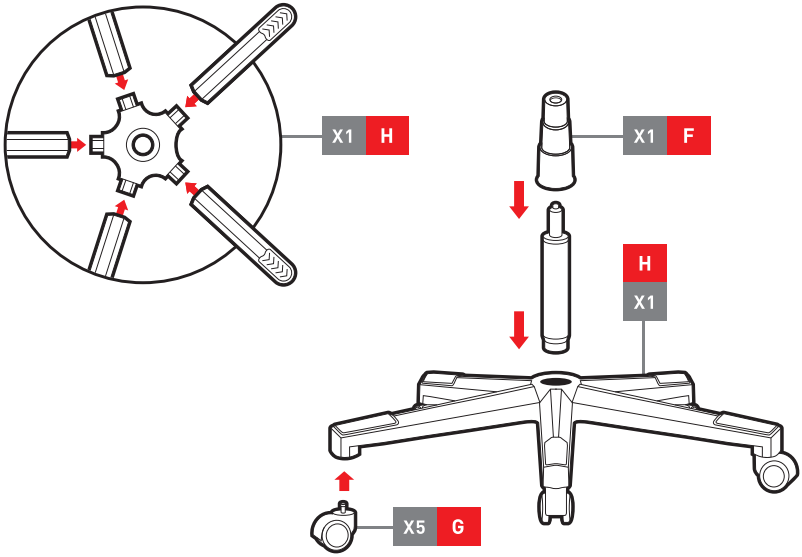

2

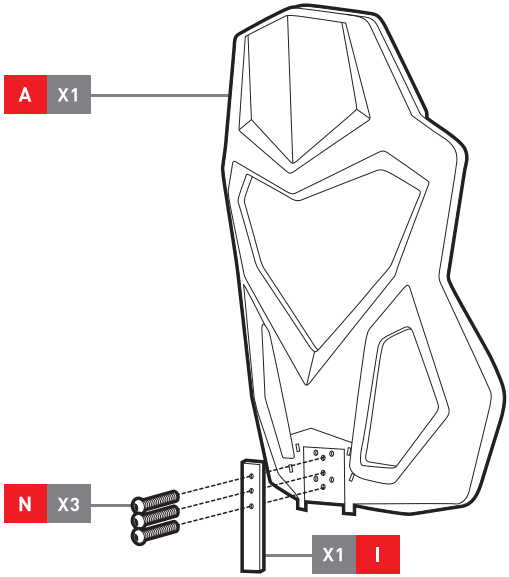

3

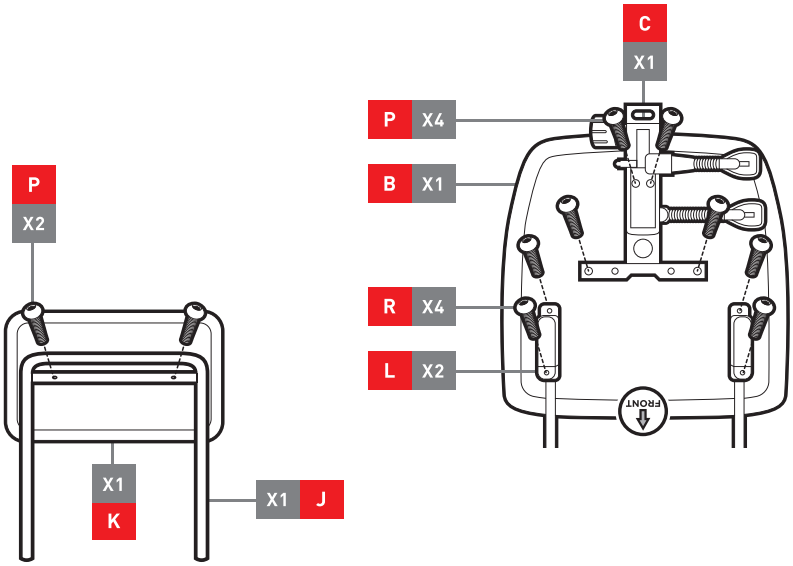

4

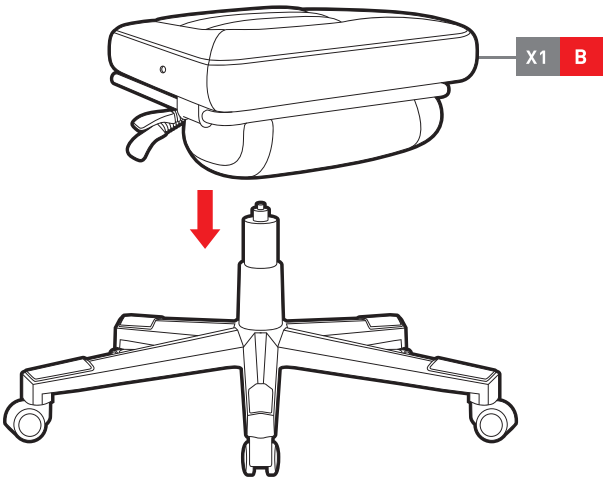

5

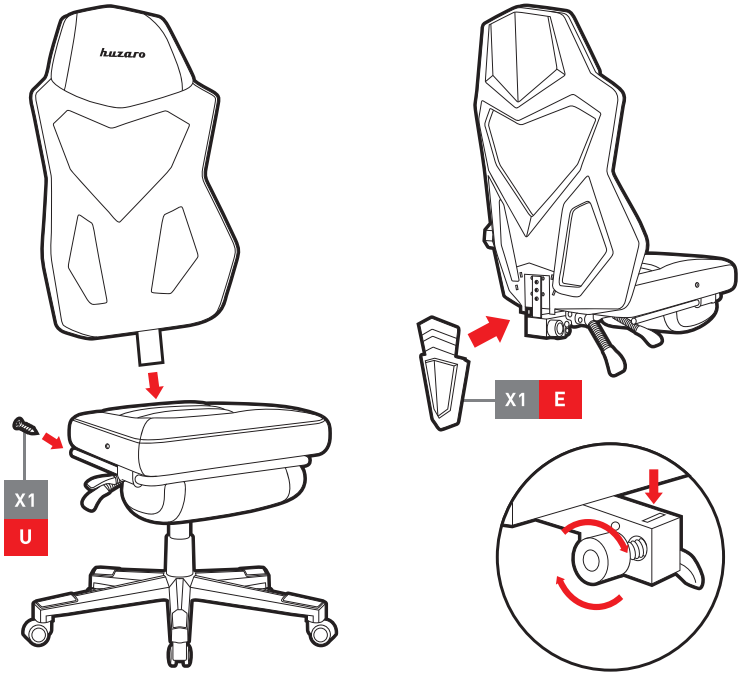

6

